D115

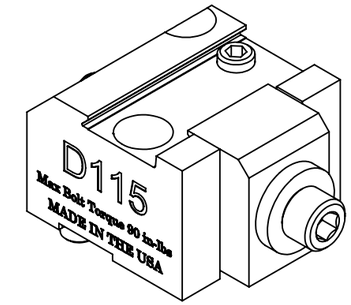

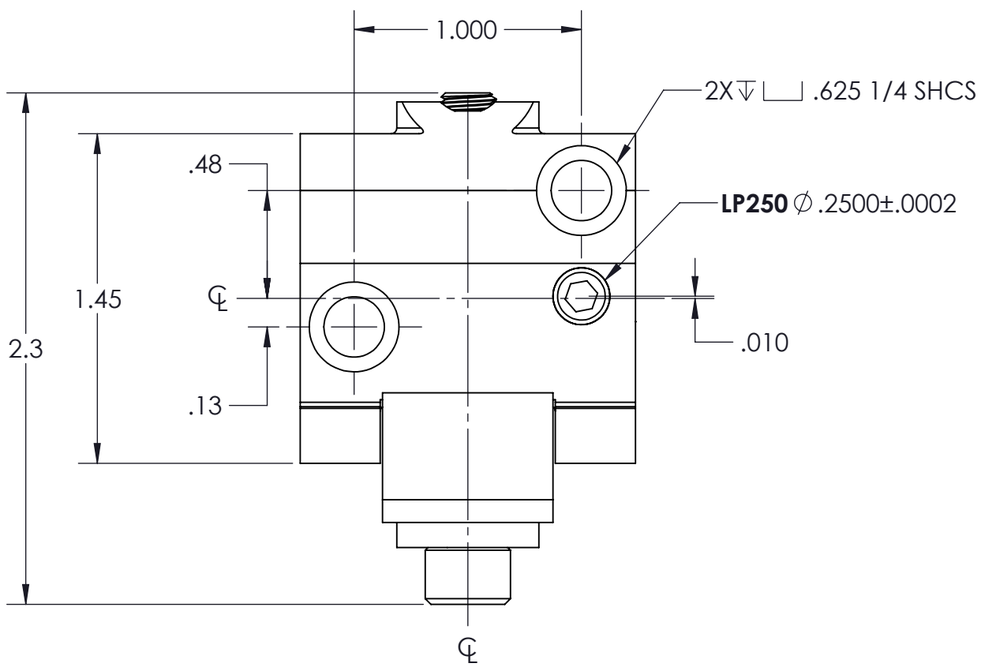

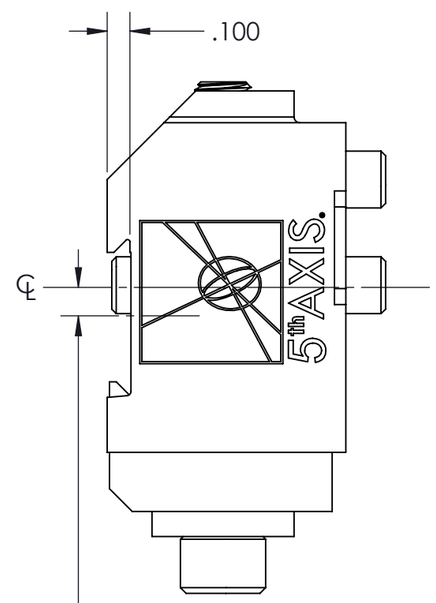

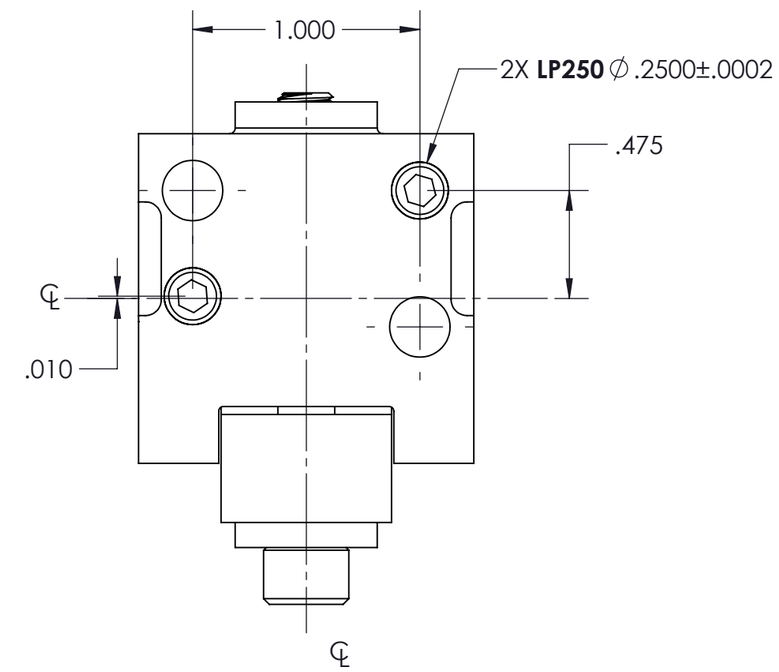

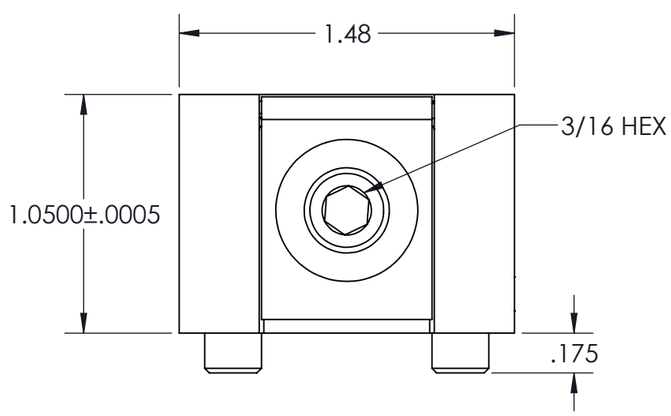

INCH	TOLERANCES	5th AXIS	WWW.FIFTHAXIS.COM 7140 ENGINEER ROAD SAN DIEGO, CA 92111 P (858) 505-0432 F (858) 505-9344
DRAWN IN ACCORDANCE WITH ASME Y14.5-2009	UNLESS OTHERWISE SPECIFIED X ± 0.1 .XX ± 0.01 .X ± 0.05 .XXX ± 0.005 ANGLULAR ± 0.5°	DESCRIPTION	DOVETAIL FIXTURE, 1"
PROPRIETARY AND CONFIDENTIAL	THRID ANGLE PROJCETION	SIZE **B** / PART NO.	D115 / REV **A**
THE INFORMATION CONTAINED IN THIS DRAWING IS THE SOLE PROPERTY OF FIFTH AXIS, INC. ANY REPRODUCTION IN PART OR AS A WHOLE WITHOUT THE WRITTEN PERMISSION OF FIFTH AXIS, INC. IS PROHIBITED.		DO NOT SCALE DRAWING / SCALE 2:1	WEIGHT: 0.5205 LBS / SHEET 1 OF 1